THE CONCRETE INSTITUTE

# concrete cricket pitches

## 1. introduction

Although most clubs can maintain turf pitches of sufficiently high standard to meet their annual fixture lists, few are able to provide turf areas of a standard which will permit proper practice and coaching. All too often the so-called practice pitch is so bumpy that any attempt at stroke play is futile, and the unpredictable behaviour of a ball bowled down such a pitch constitutes a positive danger to seasoned and inexperienced players alike.

Concrete provides a permanent solution to the problem of ever-increasing maintenance costs associated with the traditional turf pitch, whether for matches or for practice. It is now possible to simulate, very closely, the characteristics of a natural surface and at the same time provide a number of additional benefits: a concrete pitch base, with a synthetic playing surface to cater for spin and to prevent excessive wear of cricket balls, is virtually maintenance free, it does not suffer form the effects of drought, it is extremely difficult to vandalize and it cannot be damaged by being played on when wet. In fact, a concrete-based match strip, set in the middle of the ground, avoids the need for a separate practice pitch and also provides an opportunity for full-scale practice including fielding and wicket-keeping.

## 2. typical pitch layouts

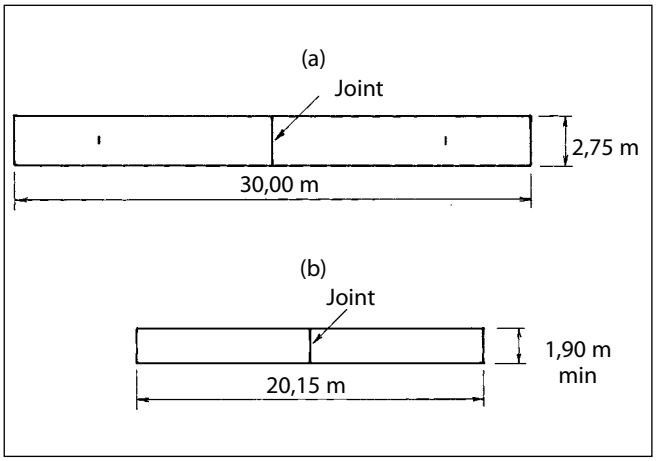


**Figure 1: Alternative layouts for match pitches**

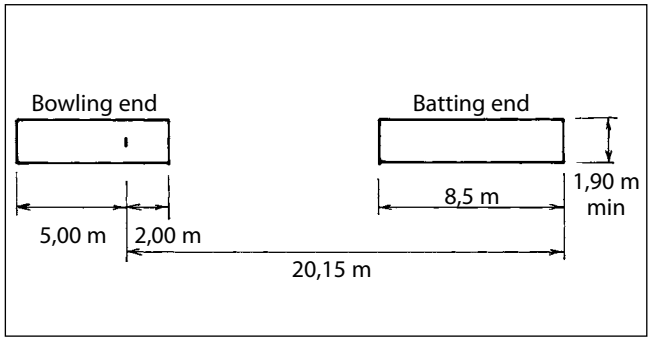


**Figure 2: Layout for practice pitch**

Figure 1 shows two alternatives that can be considered for match pitches; the choice will depend on individual requirements.

Figure 1(a) shows the ideal situation where both run-ups and pitch are constructed to a width of 2,75 m which is a little wider than the width between the return creases. With this arrangement play can take place much sooner than usual after rain, as bowlers will be able to obtain a firm foothold. Figure 1(b) shows a pitch of minimum length and width.

In both match and practice pitches the stumps should not be fixed directly in the concrete but in an opening in the concrete measuring 300 x 150 mm formed at a suitable position and later filled with clay.

## 3. site preparation

Generally, the tasks involved in preparing a site for a concrete-based pitch are the same for each type of base.

Mark out the plan area of the pitch and excavate to a depth of 100 mm plus the thickness of the surfacing mat. Any soft spongy spots should be further excavated and filled with dry, hard material. Check the depth of the excavation by bridging across with a scratch template (Figure 3) then compact the excavation either by rolling or by tamping. Check the compacted surface of the excavation from ground level in the same way as the depth of the excavation.

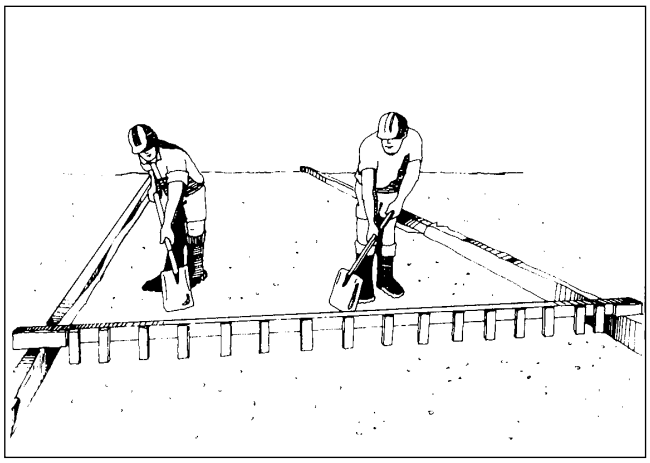

**Figure 3: Trimming the excavation using a scratch template**

Fix side forms around the perimeter of the intended slab to contain the concrete until it has hardened. The forms should be 95 mm deep, of either metal or timber – 95 mm x 32 mm planed hardwood is suitable – held securely in place by steel spikes or wooden stakes. 3 mm hardboard pieces should be used as shims between the ground and the bottom edges of the side forms to bring the forms to the correct height. The level along the pitch should follow the lie of the ground; gauge it with a taut string stretched between pegs at each end of the pitch. Check the level across the pitch with a spirit level, allowing a slight crossfall of about 12 mm to one side. Before placing concrete, paint the inner faces of the formwork with a thin film of release agent – clean lubricating oil is suitable.

## 4. the concrete

Concrete can be obtained in various ways, depending on the quantity required.

Buying cement and aggregate separately and mixing them on site in a hired or borrowed concrete mixer is probably the cheapest method of obtaining concrete, but demands a lot of effort. You will also need storage space for the materials. Cement must be kept as dry as possible; if it cannot be stored indoors it should be stacked on a raised timber platform and completely covered with waterproof sheeting.

For mixing on site, use the proportions given in Table 1, based on a 50-kg bag of cement. The approximate quantities of material required can be calculated from Tables 2 and 3.

The amount of water used in the mix should be only enough to make the mix easily workable. If the mix is too dry it will be difficult to compact and if it is too wet it will not attain the desired strength.

The mixing must be thorough, and the mixed concrete should be of uniform colour and texture before it is placed.

**Table 1: Mix proportions for site mixing per 50-kg bag of cement**

| | |
|---|---|
| Cement: complying with SANS 50197-1; strength class 42,5N or higher* | one 50-kg bag |
| Concrete sand | 95 ℓ |
| 19 mm stone | 110 ℓ |
| Water (net) approx. | 24 ℓ |

* Other cements may be used in consultation with the manufacturer.

**Table 2: Materials per m$^3$ of concrete**

| | |
|---|---|
| Cement | 355 kg |
| Sand | 0,66 m$^3$ |
| 19 mm stone | 0,79 m$^3$ |

**Table 3: Approximate concrete quantities**
(Quantities are net; increase quantities by about 10% when ordering to allow for wastage.)

| | |
|---|---|
| Layout 1(a) | 8,3 m$^3$ |
| Layout 1(b) minimum width | 3,9 m$^3$ |
| Layout 2 minimum width | 3,0 m$^3$ |

Ready-mixed concrete is far more economical in terms of time and effort but can present problems of access to the site. It should be remembered that the concrete is delivered in very heavy trucks which can cause a great deal of damage to unprotected grass areas. If, therefore, full advantage is to be taken of this system – and one of the main features of ready-mixed concrete is that it can be placed directly from the mixer truck into a prepared area – special precautions must be taken to protect the route to the pitch.

Ready-mixed concrete should be specified according to Table 4. Approximate concrete quantities are given in Table 3.

**Table 4: Specification details for ready-mixed concrete**

| | |
|---|---|
| Characteristic strength at 28 days | 25 MPa |
| Type of cement | Complying with SANS 50197-1 |
| Binder (combination of cement and extender) | Not to contain more than 20% extender, including any extender in cement |
| Nominal maximum size of stone | 19 mm |
| Workability (slump) | 50 to 75 mm |

## 5. reinforcement

The reinforcement required is a Ref-245 cross-welded steel wire mesh and it should be placed 40 to 50 mm from the surface. The reinforcement must not cross the central transverse joint but should terminate 50 mm from the joint and the side forms. Any overlaps required should be a minimum of 300 mm.

Placing the reinforcement is described under Placing and compacting the concrete.

## 6. central joint

The central joint indicated in Layouts 1(a) and 1(b) may be formed in one of two ways.

- Grooved Joint (see Figure 4) This is used when the whole pitch is to be placed in one operation. To make a grooved joint, a steel blade about 3 mm wide is forced down into the fresh concrete to a depth of 25 mm. It is then withdrawn leaving a groove into which is dropped a strip of either bituminous roofing felt (eg Malthoid) or hardboard 3 mm thick cut to size. Surface finishing of the concrete can then be completed.

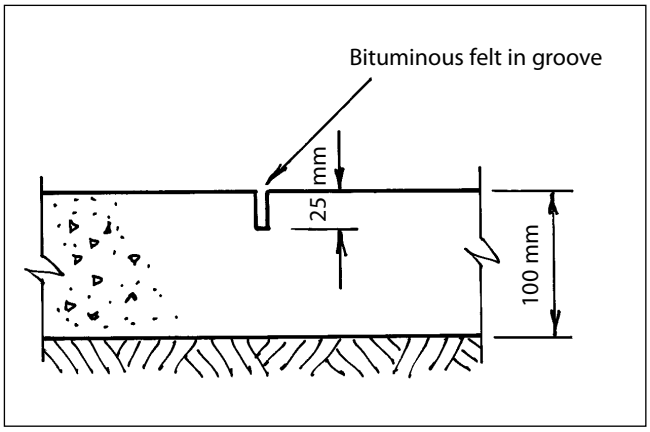


**Figure 4: Grooved joint**

- Keyed Joint (see Figure 5) This is used when half of the pitch is placed on one day and the other half on a subsequent day. It is formed by nailing a 20 mm halfround to the timber form at middepth of the concrete. After the form is removed the face of the concrete should be painted with limewash prior to the adjacent concrete being placed.

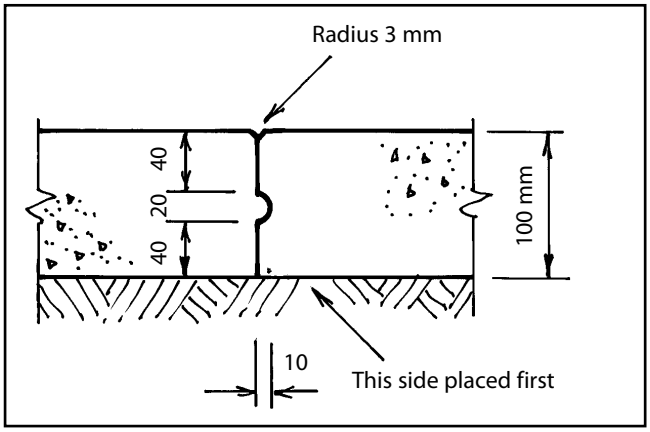


**Figure 5: Keyed joint**

## 7. placing and compacting the concrete

The compacted ground under the concrete must be damped ahead of concreting to prevent water being drawn out of the fresh concrete. However, any free surface water should be removed before the concrete is placed.

The concrete should be placed and compacted in two stages as follows:

- The concrete is first compacted and screeded off to a depth of 45 mm below the top edges of the side forms. A notched screed board as shown in Figure 6 should be used. The concrete is initially placed and roughly levelled off slightly higher than the required level (a notched template may be used for this). The notched screed board is then used with a chopping action to compact the concrete. When the concrete is compacted the notched screed board is used with a sawing action, while sliding on the side forms, to screed the concrete to the required level.

Immediately this has been done, the reinforcement is placed on the concrete, with overlaps as necessary.*

- As soon as the reinforcement is in position the rest of the concrete is placed and compacted and levelled off using a straight screed board so that the finished concrete is level with the top edges of the forms.

## 8. surface finishing

The ideal surface is a fine matt texture that will be suitable for applying a synthetic playing surface or, if the concrete is left uncovered, will not be slippery when wet. Trowelling with steel trowels is used to achieve such a surface but it must not be started until:

1. Bleeding of the mix has ceased.
2. All bleed water on the surface has evaporated or been removed.
3. The surface has started to stiffen.

A considerable downward force should be exerted on the trowel during the finishing operation. Trowelling should continue until the surface has attained an even, fine matt finish.

Small amounts of water, flicked on with a brush, may be applied to the surface to aid finishing, but as this tends to weaken the surface it should be done as little as possible and only where trowelling alone is not producing the desired results.

* Laying reinforcing fabric on the ground before concrete is placed and lifting it into position while placing, or placing it on the finished surface of the concrete and pushing it in should not be permitted, as these methods give no assurance that the reinforcement will end up in a true plane at the required depth below the surface.

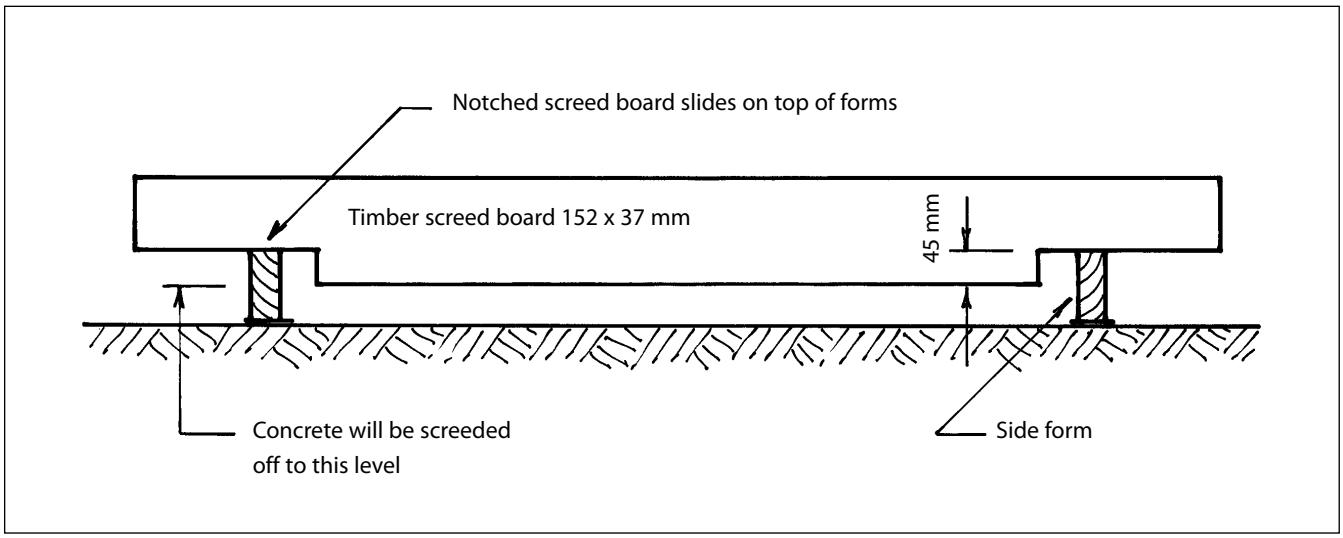


**Figure 6: Notched screed board**

Note: Planning of the work should take into account that the delay period before steel trowelling can start is likely to be 2 to 3 hours, and longer in cold weather.

During the delay period, drying of the surface of the concrete, as opposed to evaporation of bleed water, must be avoided as it may lead to cracking of the concrete.

## 9. curing

It is essential, if the concrete is to develop the desired strength, that it be kept damp for an adequate period after casting. Damp-curing should be continued for at least 10 days in warm weather and 14 days in cold weather. The curing procedure recommended is to cover the work, as soon as surface texturing is complete, with plastic sheeting that is kept in place with a thin, uniform layer of sand or soil over it and stones or poles along the edges. To avoid damage to the surface which may occur when plastic sheeting is laid directly on wet concrete, the sheeting may be supported clear of the surface by timber battens for the first 24 hours of curing. Wind must not be allowed to blow under the sheeting.

## 10. applying the synthetic playing surface

If such a surface is to be applied, the manufacturer's instructions should be followed carefully. They may include the requirement that the concrete be allowed to dry out first.



**the concrete institute**
po box 168, halfway house, 1685
block d, lone creek, waterfall park, bekker road, midrand
T 011 315 0300 • F 011 315 0315 • E-mail info@theconcreteinstitute.org.za • website www.theconcreteinstitute.org.za

published by the concrete institute, midrand, 2013